BEEE QUESTION BANK ANSWER'S

1.Define current and write down its mathematical expression in the form of voltage and resistance?

ANS. The current can be defined as the amount of charge (positive or negative) flowing in a conductor in unit time. The mathematical expression for the current flows in an electric circuit is given by the Ohms law.

The mathematical expression for the current in terms of voltage, and resistance is given by,

$$I = \frac{V}{R}$$

Here, V is the voltage, and R is the resistance.

2.**Recall PN junction diode.**
ANS. A p-n junction diode is two-terminal or two electrode semiconductor device, which allows the electric current in only one direction while blocks the electric current in opposite or reverse direction. If the diode is forward biased, it allows the electric current flow. On the other hand, if the diode is reverse biased, it blocks the electric current flow.

3.**What is multi-range ammeter?**
ANS. The current range of ammeters can be further extended by using a number of shunts and selected the required one by a range switch. The ammeter using this type of shunt (called universal shunt) is known as **multi range ammeter.**

4. **Which is more reliable type of protective device fuse or MCB? and why?**
ANS. The problem with the fuses is that whenever overloading occurs the fuse wire melts and it has to be replaced to complete the circuit. This problem is overcome in miniature circuit breakers (MCBs) which are widely used nowadays.
MCBs are switches that turn off automatically when there is an overload or a short circuit, that why MCB is more protective as compare to Fuse.

5. **What is Electrical Power?**
ANS. Electric power is the rate at which work is done in an electrical circuit.

6. What is Temperature Coefficient of Resistance?

ANS. The temperature coefficient of resistance is generally defined as the change in electrical resistance of a substance with respect to per degree change in temperature.

7. **Explain types of wirings**.

ANS. They are 4 Different types of wiring.

Transtaram. Inc

- **Cleat wiring -** In this type of wiring, the insulated conductors are supported on porcelain or wooden cleat. The cleats have two halves.

- **Batten wiring -** This wiring system is a very old method in which all wires are tied with an iron clip on top of a wooden strip (batten).

- **Casing and caping -** This type of wiring is very popular. Because this wiring system is very easy to do and it is also very cheap.

- **Conduit wiring -** This type of wiring is very popular. Because this wiring system is very easy to do and it is also very cheap.

8.Which rectifier has higher efficiency.
ANS. As full-wave rectifier over half-wave rectifier is that such as the average output voltage is higher in full-wave rectifier, there is less ripple produced in full-wave rectifier when compared to the half-wave rectifier, as a result Full wave rectifier has higher efficiency.

9. Which component of PMMC is responsible for controlling torque?
ANS. In PMMC instrument the controlling torque is because of the springs. The spring also provides the path to the lead current to flow in and out of the moving coil. The controlling torque is mainly because of the suspension of the ribbon.

10. Classify different type of capacitors?
ANS.
Here *Electrolytic is Polar(D.C) and Electrostatic is *Non polar(A.C, D.C).

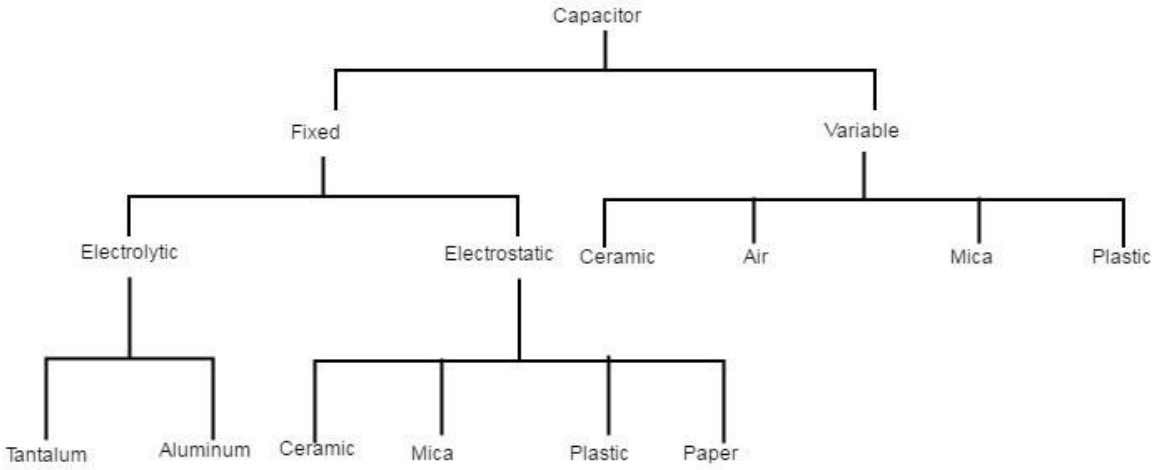

Tarantaram, Inc

11. Construct equation of rectification efficiency of full wave rectifier.

ANS.

The instantaneous value of current is given by the equation:

$$\mathbf{i = v / (r_f + R_L)}$$

As we know,

$$v = V_m \sin \theta$$

Therefore,

$$i = V_m \sin \theta / (r_f + R_L)$$

When sin θ = 1, then current = maximum. Therefore,

$$I_m = V_m / (r_f + R_L)$$

Where,

$$i = I_m \sin \theta$$

Since output is obtained across R_L , therefore

$$\mathbf{D.C\ power\ output = I_{dc}^2 R_L}$$

$$= I_{av}^2 R_L$$

Where,

$$I_{av} = \int (i\, d\theta) / \pi \quad \ldots\ldots (i)$$

Integrate equation (i) from 0 to π,

$$I_{av} = (1 / \pi) * \int I_m \sin \theta\, d\theta$$

$$= (I_m / \pi) * \int \sin \theta\, d\theta$$

$$= (I_m / \pi) [- \cos \theta]$$

$$= (I_m / \pi) [-(-1-1)]$$

$$= 2 (I_m / \pi)$$

$$= (2I_m / \pi)$$

Therefore, DC power output is given as,

$$P_{dc} = I_{dc}^2 R_L = (2I_m / \pi)^2 R_L$$

Transfaram. Inc

And AC power input is given as,

$$P_{ac} = I_{rms}^2 (r_f + R_L)$$

Where,

$$** \; I_{rms} = \sqrt{\int (i^2 \, d\theta) / \pi} \; ..... \text{(ii)}$$

$$= \sqrt{(1/\pi) * \int I_m^2 \sin^2\theta \, d\theta}$$

$$= \sqrt{(I_m^2 / \pi) * \int (1 - \cos 2\theta)/2 \; d\theta}$$

$$= \sqrt{(I_m^2 / 2\pi) * [\int d\theta - \int \cos 2\theta \, d\theta]}$$

$$= \sqrt{(I_m^2 / 2\pi) * [[\theta] - [\sin 2\theta / 2]]}$$

$$= \sqrt{(I_m^2 / 2\pi) * [\pi - 0]}$$

$$= I_m / \sqrt{2}$$

Therefore, AC power input is given as,

$$\mathbf{P_{ac} = I_{rms}^2 (r_f + R_L)}$$

$$= (I_m / \sqrt{2})^2 (r_f + R_L)$$

As we know,

$$\textbf{Rectifier Efficiency } (\eta) = P_{dc} / P_{ac}$$

Put the values of P_{dc} and P_{ac} from above equations, therefore,

$$\eta = [(2I_m / \pi)^2 * R_L] / [(I_m / \sqrt{2})^2 * (r_f + R_L)]$$

$$= 0.812 \, R_L / (r_f + R_L)$$

$$= 0.812 / (1 + r_f / R_L)$$

If r_f is neglected as compared to R_L then the efficiency of the rectifier is maximum. Therefore,

$$\eta_{max} = 0.812 = 81.2\%$$

Calculation of Form Factor and Peak factor:

13. **Explain working of PV power plant?**

ANS. Photovoltaic Solar Power Plant

Also known as PV, the working of a <u>photovoltaic solar power plant</u> involves photovoltaic cells. These panels are made with silicon alloys and are available in different forms. They store the energy in the batteries and can generously convert it from DC to AC. The PV panels produce free electrons once the sunlight hits the semiconductor material. This process is known as the photoelectric effect and is converted to AC from DC with an inverter.

Transfaram. Inc

14. **Show schematic for different region of operation for BJT.**

ANS.

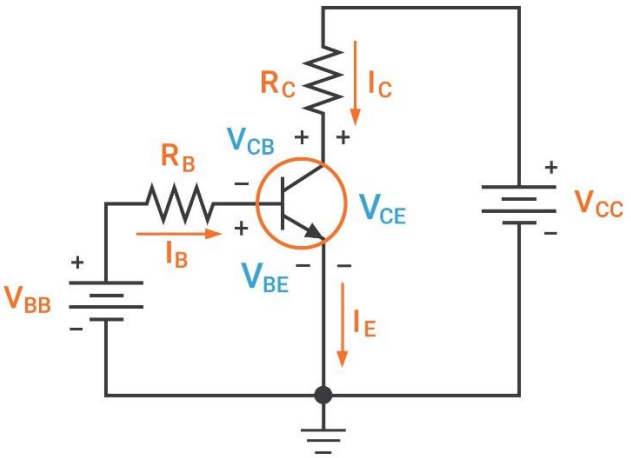

15. What is the function of economizer in case of thermal power plant?

ANS. The main Function of Economizers is to reduce energy consumption or to perform useful functions such as preheating a fluid. In addition, economizers are also used to generate heat when flue gases are burned before they are discharged from the chimney.

16. Infer self-inductance and mutual inductance.

ANS. Difference between Self and Mutual Inductance

Self-inductance	Mutual inductance
In self-inductance, the change in the strength of current in the coil is opposed by the coil itself by inducing an e.m.f.	In mutual inductance out of the two coils one coil opposes change in the strength of the current flowing in the other coil.
The induced current opposes the growth of current in the coil when the main current in the coil increases.	The induced current developed in the neighbouring coil opposes the growth of current in the coil when the main current in the coil increases.
The induced current opposes the decay of current in the coil when the main current in the coil decreases.	The induced current developed in the neighbouring coil opposes the decay of the current in the coil when the main current in the coil decreases.

Transfaran. Inc

17. Explain various logic gate with its symbol.

ANS. The basic logic gates are classified into seven types: AND gate, OR gate, XOR gate, NAND gate, NOR gate, XNOR gate, and NOT gate.

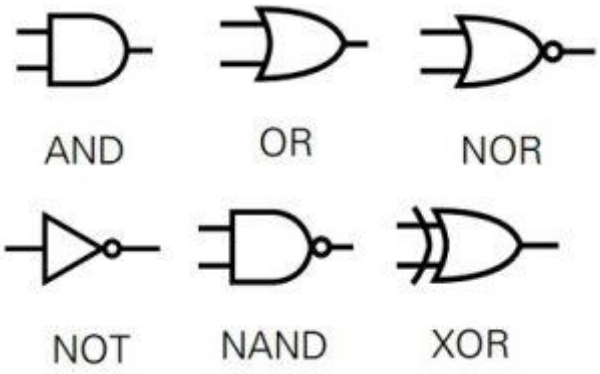

- **AND Gate**

The AND gate is a digital logic gate with 'n' i/ps one o/p, which performs logical conjunction based on the combinations of its inputs. The output of this gate is true only when all the inputs are true. When one or more inputs of the AND gate's i/ps are false, then only the output of the AND gate is false.

- **OR Gate**

The OR gate is a digital logic gate with 'n' i/ps and one o/p, that performs logical conjunction based on the combinations of its inputs. The output of the OR gate is true only when one or more inputs are true. If all the i/ps of the gate are false, then only the output of the OR gate is false.

- **NOT Gate**

The NOT gate is a digital logic gate with one input and one output that operates an inverter operation of the input. The output of the NOT gate is the reverse of the input. When the input of the NOT gate is true then the output will be false and vice versa.

- **NAND Gate**

The NAND gate is a digital logic gate with 'n' i/ps and one o/p, that performs the operation of the AND gate followed by the operation of the NOT gate. NAND gate is designed by combining the AND and NOT

Transtarian Inc

gates. If the input of the NAND gate high, then the output of the gate will be low.

- **NOR Gate**

The NOR gate is a digital logic gate with n inputs and one output, that performs the operation of the OR gate followed by the NOT gate. NOR gate is designed by combining the OR and NOT gate. When any one of the i/ps of the NOR gate is true, then the output of the NOR gate will be false.

18. Summarize Active and saturation region of BJT.

ANS.

- **Active region**

This is the region in which transistors have many applications. This is also called as linear region. This region lies between saturation and cutoff.

Transfaram. Inc

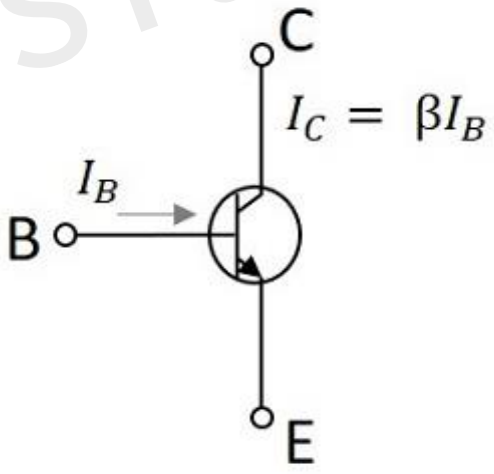

In Active region

- **Saturation region**

This is the region in which transistor tends to behave as a closed switch. The transistor has the effect of its collector and Emitter being shorted.

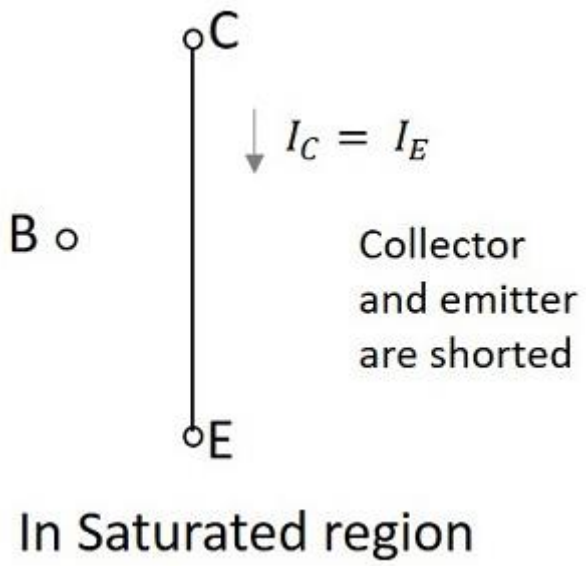

19. What is EMF ?

ANS. EMF is the force that cause an electric current to flow in an electric circuit. The S.I unit of EMF is Volt(v).

54

20.Recall Ripple factor?

ANS. Ripple Factor is the ratio of rms value of ac component present in the rectified output to the average value of rectified output.

21.What is Multi-range ammeter?

ANS. The voltage range of voltmeter can be further extended by using a number of multipliers and selecting the required one by a range selector, such type of voltmeter is called multi range voltmeter.

22. What is the function of inverter in Solar power plant .

ANS. Solar inverters, also known as **PV inverters** , play a crucial role in the solar energy system. They are mostly considered the brains of a project. **The solar panel inverter is beneficial in changing the direct current to alternate current.** Direct current is the power that flows in one direction in the circuit and assists in providing current when there is no electricity.

23. Summarize the advantages of casing capping wiring?

Transfaram. Inc

ANS.

- The casing and capping wiring system is durable and long-lasting.
- The cost of installation is cost-effective.
- The installation is quite easy and quick.
- Along with the PVC wires, the use of metallic wires is also possible.
- The repairing of damage is easy and not costly.
- The casing and capping protect against humidity and smoke.
- The wiring system is strong and the risk of any electric shock is less.

24. Select wiring for the temporary purpose and explain it.

ANS. Cleat Wiring

Cleat wiring system is a temporary wiring system therefore it is not suitable for domestic premises. The use of cleat wiring system is over nowadays.

Transfaram. Inc

25. Outline the common base mode of BJT.

ANS. The Common Base Amplifier is a type of BJT configuration or bipolar junction transistor, in which the input and output signals share the base terminal of the transistor, hence the name common base (CB).

26. Equation for Temperature coefficient of resistor.

ANS.

The resistance is R_1 at temperature T_1 degree centigrade and R_2 at T_2 degree Centigrade.

$$\frac{R_1}{R_2} = \frac{(T_1 + T_o)}{(T_2 + T_o)} --(1)$$

T_0 is the temperature at zero degree centigrade. The resistance at temperature 't' can be given as ;

$$\frac{R_t}{R_0} = \frac{(t_0 + t)}{(t_0 + 0)}$$

$$R_t = \frac{R_0(t_0 + t)}{t_0}$$

$$R_t = R_0 + \frac{R_0 t}{t_0}$$

$$R_t = R_0 + \left(\frac{1}{t_0}\right) R_0 t$$

$$R_t - R_0 = \alpha_0 R_0 t \; --(2)$$

$$Where, \left(\frac{1}{t_0}\right) = \alpha_0$$

α_0 is called the ***temperature coefficient of the resistance*** of the material at 0°C.

27. Infer batten and capping type of wiring.

ANS. Batten Wiring System

A type of wiring which is done on concrete or ripe walls above a long and smooth wooden batten by means of passing wires through the buckle clips installed at an equal distance via brass kneels is known as batten wiring.

Casing Capping Wiring System

This type of wiring system once used to be very popular. However, now it has been replaced by the conduit wiring system. Although this wiring system is quite ancient, however, it is still being used in offices, homes, shops, and other ordinary premises.

Transfaram. Inc

28. Examine the colour coding of the resistor with an example.

ANS.

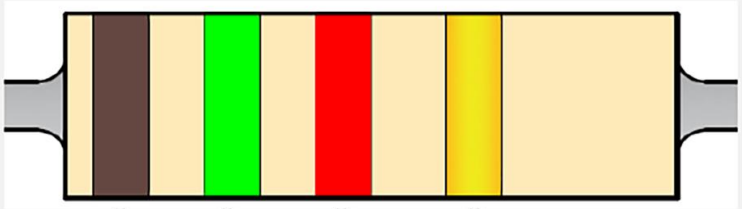

	1st Digit	2nd Digit	Multiplier	Tolerance
Black	0	0	x 1	
Brown	1	1	x10	±1%
Red	2	2	$x10^2$	±2%
Orange	3	3	$x10^3$	±3%
Yellow	4	4	$x10^4$	±4%
Green	5	5	$x10^5$	±0.5%
Blue	6	6	$x10^6$	±0.25%
Violet	7	7	$x10^7$	±0.1%
Grey	8	8	$x10^8$	±0.05%
White	9	9	$x10^9$	
Gold			$x10^{-1}$	±5%
Silver			$x10^{-2}$	±10%

Transform . Inc

29. Explain working of zener diode .

ANS. A Zener diode operates just like a normal diode when it is forward-biased. However, a small leakage current flows through the diode when connected in reverse-biased mode. As the reverse voltage increases to the predetermined breakdown voltage (Vz), current starts flowing through the diode.

30. Examine input characteristic of BJT characteristics of BJT.

ANS.

BJT Input characteristics :

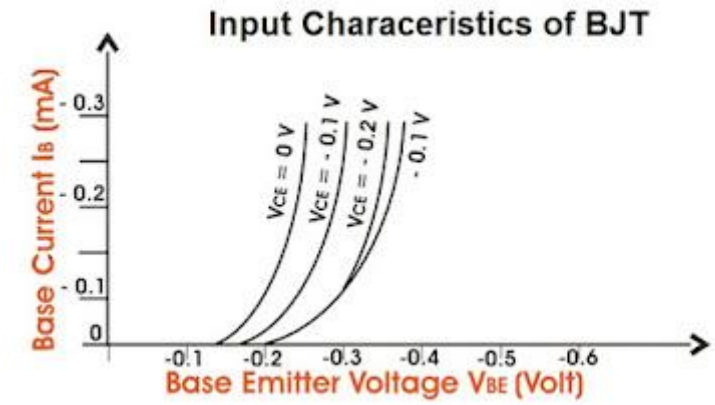

- A graph of base current I_B Vs base-emitter voltage V_{BE} gives input characteristics.
- Since a transistor's base-emitter junction is like a diode I_B versus V_{BE} graph resembles a diode curve.
- When collector-emitter voltage V_{CE2} is more than V_{CE1}, base current, for the same V_{BE}, decreases as shown in the figure.

31. What is Energy?

ANS. Energy is the ability to do work

According to the laws of conservation of energy, " energy can neither be created nor destroyed but can only be converted from one form to another". The SI unit of energy is Joule.

32. Recall rectification efficiency.

ANS. Rectification Efficiency is quantitative measurement of rectifier efficiency. It is ratio of DC power output to the AC power input of the rectifier. It is usually denoted by η and expressed in percentage.

33. Tell about temperature coefficient of resistor?

ANS. A resistor's Temperature Coefficient of Resistance (TCR) tells how much its value changes as its temperature changes. It is usually expressed in ppm/°C (parts per million per degree Centigrade) units.

Transfaram. Inc

34. What is forward biasing in case of PN junction diode?

ANS. In forward biased p-n junction diode, the positive terminal of the battery is connected to the p-type semiconductor material and the negative terminal of the battery is connected to the n-type semiconductor material.

35. Which meter is use for measurement of current ?

ANS. Ammeter is use to measure the current**.**

36. Show the features of voltmeter?

ANS.

- **It is an instrument used to measure the potential difference across two terminals in a circuit.**
- **It can measure the voltage of the order millivolts to the order of kilovolts.**
- **It is connected in parallel to the source across which the voltage is to be measured.**

Transfaram. Inc

37. Summarize conventional energy resources.

ANS. When we cannot reuse a source of energy after using it once we call them “conventional sources of energy” or “non-renewable energy resources”. They are the most important conventional sources of energy. These include coal, petroleum, natural gas and nuclear energy.

38. Develop equation for Rectification efficiency of half wave rectifier.

ANS. Rectifier Efficiency | Half Wave Rectifier

It is defined as the ratio of the dc output power P_{dc} to the a.c. input Power P_i and is, therefore, given by,

Rectifier Efficiency $\eta = \frac{P_{dc}}{P_i}$

$$= \frac{I_m^2 \frac{R_L}{\pi^2}}{I_m^2 \frac{(R_f + R_L)}{4}}$$

$$= (\frac{2}{\pi})^2 \frac{R_L}{R_f + R_L}$$

Or $$\eta = \frac{0.406}{1 + \frac{R_f}{R_L}}$$ ……(18)

% rectifier efficiency $$= \frac{40.6}{1 + \frac{R_f}{R_L}}$$ …..(19)

From equation (18) we conclude that the rectifier efficiency increases as the ratio $\frac{R_f}{R_L}$ reduces. Further from equation (19) we find that the theoretical maximum value of rectifier efficiency of a half wave rectifier is only 40.6% and this is obtained when $\frac{R_f}{R_L} = 0$.

Transfaram. Inc

39. What are the basic features of PMMC meter?

ANS.

- The PMMC consumes less power and has great accuracy.
- It has a uniformly divided scale and can cover an arc of 270 degrees.
- The PMMC has a high torque to weight ratio.
- It can be modified as an ammeter or voltmeter with suitable resistance.
- It has efficient damping characteristics and is not affected by a stray magnetic field.
- It produces no losses due to hysteresis.

40. Outline the advantages Non conventional energy sources.

AND. Advantages:

(i)Non-conventional sources of energy are inexhaustible. They do not pollute the environment.

(ii)Nuclear power is emits large amounts of energy.

(iii)Non-conventional sources of energy are low cost and easy to operate.

41. Infer the economizer and super-heater.

ANS.

- ***Superheaters***

A superheater is a vital part of the a boiler system that is used to increase the overall efficiency of a thermal power plant. More specifically, it is a device which converts wet steam (saturated steam) into dry steam as dry steam contains more thermal energy.

- ***Economisers***

An economiser is a mechanical device that reduces energy consumption. It does this by acting as a heat exchanger, preheating the fluids that enter a boiler or recovering residual heat from the combustion products.

42. Examine the different material used in the resistors.

ANS.

- Wire –wound(WW):
  These types are made by winding resistance wire in a spiral around a non-conductive core.
- Carbon Composition (CCR):
  The resistive element is made from a mixture of fine carbon particles and a non- conductive ceramic material. The substance is pressed in a cylindrical shape and baked.
- Carbon Film:
  A thin, pure carbon film is deposited on an insulating cylindrical core. A spiral cut is made in the film to increase the resistive path.
- Metal Film Resistor:
  Metal film resistors are usually made of Nichrome, but also other materials such as tantalum nitride is used. The resistive film is printed on a cylindrical or flat insulating substrate.

43. Explain electrolytic capacitor .

ANS. An electrolytic capacitor is a type of capacitor that uses an electrolyte to achieve a larger capacitance than other capacitor types. An electrolyte is a liquid or gel containing a high concentration of ions.

44. Explain ripple factor and derive expression for full wave rectifier.

ANS. The ratio of the RMS value of an alternating current component in the rectified output to the average value of rectified output.

Transfaram. Inc

For full-wave rectifier,

$$I_{rms} = I_m/\sqrt{2}$$

$$I_{dc} = 2I_m / \pi$$

As we know it **R.F =** $\sqrt{(I_{rms} / I_{dc})^2 - 1}$

Substitute the above I_{rms} & I_{dc} in the above equation so we can get the following.

$$R.F = \sqrt{(Im/\sqrt{2}/ 2Im / \pi)2 - 1} = 0.48$$

45. Explain about variable resistor.

ANS. A variable resistor is a resistor of which the electric resistance value can be adjusted. A variable resistor is in essence an electro-mechanical transducer and normally works by sliding a contact (wiper) over a resistive element.

46. Summarize type of Inductor.

AND. Different Types of Inductors

Depending on the type of material used inductors can be classified as follows:

1. Iron Core Inductor
2. Air Core Inductor
3. Iron Powder Inductor
4. Ferrite Core Inductor which is divided into,

- Soft Ferrite
- Hard Ferrite

Iron Core Inductor

As the name suggests the core of this type of inductor is made of iron. These inductors are low space inductors that have high power and high inductance value. However, they are limited in high-frequency capacity. These inductors are used in audio equipment.

Air Core Inductor

These inductors are used when the amount of inductance required is low. Since there is no core, it does not have a core loss.

Transfarm. Inc

Iron Powder Inductor

In this type of inductor, the core is Iron Oxide. They are formed by very fine and insulating particles of pure iron powder. High magnetic flux can be stored in it due to the air gap. The permeability of the core of this type of inductor is very less. They are usually below 100. They are mainly used in switching power supplies.

Ferrite Core Inductor

In this type of Inductor, ferrite materials are used as core. The general composition of ferrites is XFe_2O_4. Where X represents transition material. Ferrites can be classified into two types. Soft ferrites and hard ferrites.

- Soft Ferrite: Materials that have the ability to reverse their polarity without any external energy.
- Hard Ferrite: These are permanent magnets. That is their polarity will not change even when the magnetic field is removed.

47. Illustrate forward and reverse biasing of PN junction diode.

ANS.

- **Forward bias: Here, the voltage potential connections are as follows: -Ve (negative) to the N-type material and +Ve (positive) to the P-type material, across the diode. The effect is a decrease in the PN junction diode's width.**
- **Reverse bias: During this biasing condition, the voltage potential connections are as follows: +Ve (positive) to the N-type material and -Ve (negative) to the P-type material, across the diode. The result of this is an increase in the PN junction diode's width.**

48. What is carbon compound resistor?

ANS. Carbon composition resistors (CCR) are fixed value resistors. They are made out of fine carbon particles mixed with a binder (for example clay). After baking, it has a solid form.

49. Explain working principal of MCB.

Transfaram. Inc

ANS. When the current overflow occurs through MCB – Miniature Circuit Breaker, the bimetallic strip gets heated and deflects by bending. The deflection of the bi-metallic strip releases a latch. The latch causes the MCB to turn off by stopping the current flow in the circuit.

50. Examine the Multi-range voltmeter with expression of series resistance.

ANS. The moving coil multi-range voltmeter can be used to measure A.C. as well as D.C. voltages. The operation of these meters depend on the interaction between the field of permanent magnet and moving coil field. To measure the voltage, select the desired voltage range and toggle the switch to choose between A.C and D.C.

Transfaram. Inc